
A&K CRANES
Crane & Mechanical
"Elevating Your Expectations"
ES
A&K CRANES
Crane & Mechanical
Crane Hire ▪ Heavy Transport ▪ Engineering & Civil Construction

Who are we?

Adam & Kirsty Trezise

Meet Adam and Kirsty ~ The 'A' and 'K' of A & K Cranes

A & K Cranes Overview:
Founded in 2018 by Adam and Kirsty, A & K Cranes is a family-owned and operated business specialising in crane hire and heavy transport services. Based in Timaru and Christchurch covering the South Island, we offer a range of lifting and transport solutions tailored to various industries, ensuring safety, efficiency, and competitive pricing.

Expertise and Services:
With over a century of family expertise in the heavy trucking industry, spanning three generations (circa 1920 - 2024), Adam brings two decades of personal experience in the mobile crane sector. Under Adam and Kirsty's leadership, A & K Cranes has managed a variety of projects, ranging from high-profile lifts to intricate wind farm constructions. Our fleet of well-maintained cranes, heavy transport equipment operated by skilled professionals, is capable of handling jobs of any scale and complexity. We prioritise innovative solutions and are committed to meeting all legislative, safety and regulatory requirements.

Kirsty, the Office Administrator, ensures smooth daily operations and efficient administration, coordinating schedules, handling communications, and supporting the team with her keen organisational skills.

Commitment to Clients and Community:
At A & K Cranes, we focus on building strong, lasting relationships with our clients. By understanding their unique needs, we tailor our services to ensure the highest level of satisfaction. Our dedication extends to our community, where we strive to contribute positively through our work and interactions. Our offices in Timaru and Christchurch are staffed with knowledgeable professionals ready to provide assistance for your next project.

"Your Trusted Partner in Precision Lifting"

R I P Eileen Trezise - Forever in our hearts

A&K CRANES
Crane & Mechanical

Humma - UV 25-25 Pick-up and Carry

- **Compact design** for maneuverability in tight spaces
- **All-terrain capability** for diverse environments
- **High lift capacity** for efficient handling of heavy loads
- **Versatile boom** configuration for extended reach and flexibility
- **Advanced safety features**, including overload protection and stability monitoring
- **Fuel-efficient** design for reduced operational costs
- **Customisable options** to meet specific project requirements

AREA OF OPERATION

WINCH LOAD CHART

Rope Falls	Winch Load (Kg)
1	4 200
2	8 400
4	16 800
6	25 200

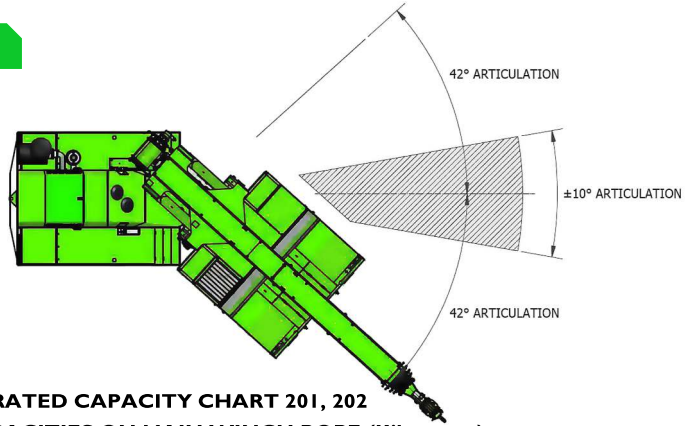

RADIUS LOAD CHART

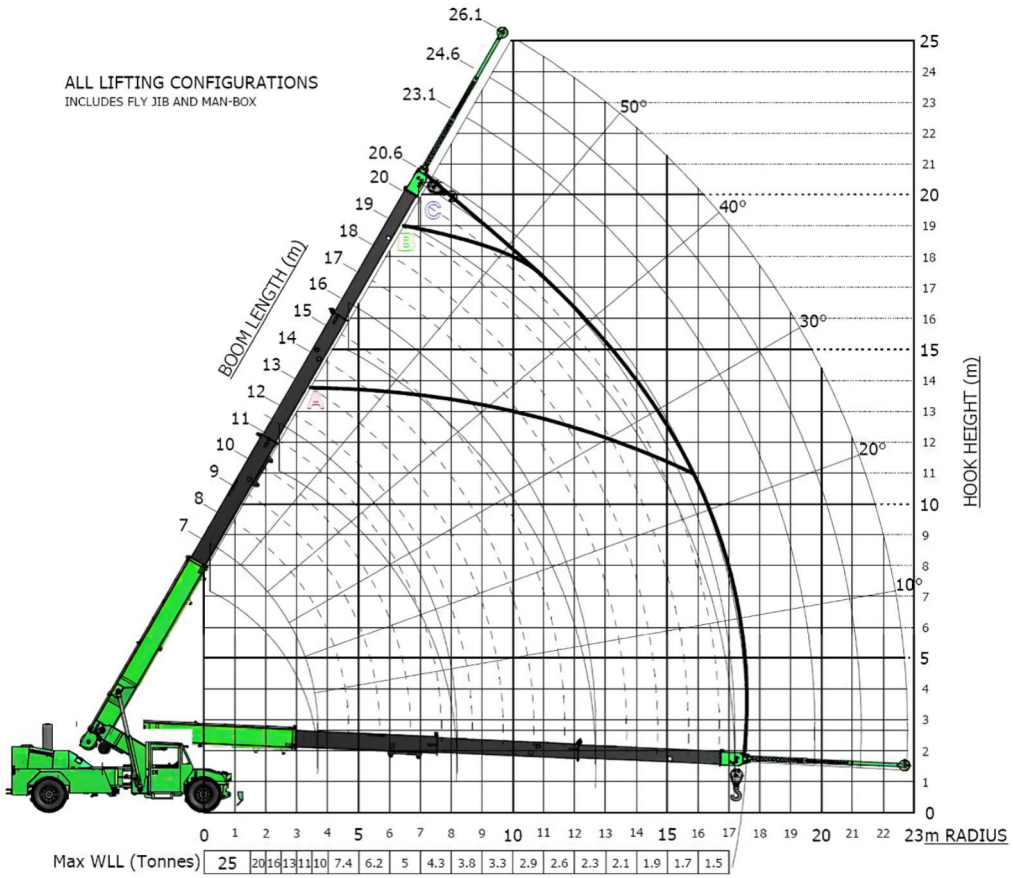

LOAD CHART

RATED CAPACITY CHART 201, 202

RATED CAPACITIES ON MAIN WINCH ROPE (Kilograms)

±10°, ±42° ARTICULATION

CAPACITIES ON SHEAVE HOOK IN KILOGRAMS

201 LMI CHART 10 DEG ARTICULATION
202 LMI CHART 42 DEG ARTICULATION

RAD	BOOM LENGTH 7.143	8	9	10	11	12	13	14	15	16	17	18	19	20	20.6
1.4	24934	23534	22185												
	24934	23534	22185												
	49	54	58												
2	20795	21238	20046	18938											
	18426	18272	18130	18016											
	42	48	54	58											
3	13453	13331	13218	13128	13054	12993									
	11874	11752	11639	11549	11475	10261									
	28	38	45	51	55	58									
4	10259	9676	9578	9500	9436	9382	9337	9298							
	9023	8492	8394	8315	8251	8198	8152	8114							
	3.83	24	36	43	48	52	56	59							
5		8061	7394	7323	7264	7216	7175	7139	7109	7082					
		7051	6447	6375	6317	6315	6412	6496	6568	6632					
		4.69	23	34	41	46	50	54	56	59					
6			6333	5871	5817	5815	5906	5984	6052	6111	6163	5788			
			5501	5082	5027	5025	5116	5194	5262	5321	5374	5420			
			5.69	21	32	39	44	48	52	54	57	59			
7				5122	4783	4781	4868	4942	5006	5062	5112	5156	4806	4441	
				4414	4106	4104	4191	4265	4329	4385	4435	4479	4518	4441	
				6.69	20	31	38	43	47	50	53	55	57	59	
8					4226	4006	4089	4160	4222	4276	4323	4365	4407	4070	3888
					3610	3414	3497	3568	3629	3683	3731	3773	3811	3845	3888
					7.69	20	30	36	41	45	48	51	53	56	57
9						3574	3483	3552	3612	3664	3710	3751	3787	3753	3585
						3029	2957	3025	3085	3137	3183	3224	3261	3294	3313
						8.69	19	28	35	40	44	47	50	52	53
10							3138	3065	3123	3174	3219	3341	3295	3327	3322
							2649	2592	2650	2700	2745	2785	2821	2853	2872
							9.69	18	27	34	38	42	46	48	50
11								2782	2724	2774	2818	2857	2891	2923	2941
								2339	2293	2343	2387	2426	2461	2492	2511
								10.69	17	27	33	37	41	44	46
12									2488	2440	2483	2521	2555	2586	2604
									2083	2045	2088	2126	2161	2191	2209
									11.69	17	26	32	36	40	42
13										2240	2200	2238	2271	2301	2319
										1867	1835	1873	1907	1937	1955
										12.69	16	25	31	35	38
14											2028	1994	2027	2057	2075
											1682	1656	1689	1719	1736
											13.69	16	24	30	33
15			GREEN	10 DEG ARTICULATION								1846	1816	1846	1863
			YELLOW	42 DEG ARTICULATION								1523	1500	1530	1547
			UNDER LINED VALUES INDICATE RADIUS AT 0 DEG									14.69	15	24	28
16													1686	1661	1678
													1384	1364	1382
													15.69	15	21
17														1546	1514
														1262	1236
														16.69	10
17.33															1464
															1190
															0

Humma UV 25-25

A&K CRANES
Crane & Mechanical

IHI CCH 1000-HL 100t Crawler Crane

- **100 tonne Crawler Crane** best in class with additional counterweight giving up to 40% more capacity over most other 100t crawlers
- **High Lift Capacity** capable of lifting very heavy loads, suitable for large-scale projects
- **Advanced Safety Systems** equipped with state-of-the-art safety features like overload protection and stability controls
- **Precision Control** provides smooth and precise handling for intricate lifting tasks
- **All-Terrain Mobility** designed for effective operation on various types of terrain
- **Technological Integration** incorporates advanced technology for enhanced performance and monitoring

RATED LIFTING LOADS

(Add. counterweight) (Throughout 360° ; within 78% of tipping load; front stability factor over 1.15) **(Unit; metric ton)**

Boom Length / Working Radius (m)	18	21	24	27	30	33	36	39	42	45	48	51	54	57	60	63	66	69	72
5.0	100.0																		
5.5	100.0	90.0																	
6.0	94.5	90.0	80.0																
7.0	83.0	81.2	75.0	70.0	60.0														
8.0	71.7	71.5	67.5	64.0	60.0	50.0	50.0												
9.0	60.6	59.8	59.7	57.5	54.1	50.0	50.0	40.0	40.0										
10.0	51.4	51.2	51.1	51.0	48.8	46.6	46.0	40.0	40.0	40.0	30.0								
12.0	39.8	39.6	39.5	39.4	39.3	39.2	38.4	36.3	36.2	35.6	30.0	30.0	25.0	25.0					
14.0	32.3	32.1	32.0	31.9	31.8	31.7	31.6	31.4	31.3	30.7	28.3	27.8	25.0	25.0	20.0	20.0	18.0	16.0	
16.0	27.0	26.9	26.8	26.6	26.5	26.4	26.3	26.1	26.0	25.9	25.7	24.9	23.2	23.1	20.0	20.0	18.0	16.0	14.5
18.0	17.0m x 25.1	23.0	22.9	22.8	22.7	22.6	22.4	22.3	22.2	22.0	21.9	21.8	21.0	20.9	18.9	18.8	17.4	16.0	14.5
20.0		19.6m x 20.6	19.9	19.8	19.7	19.6	19.5	19.3	19.2	19.0	18.9	18.8	18.6	18.4	17.6	17.5	16.7	15.2	13.6
22.0			12.19m x 16.7	17.5	17.3	17.2	17.1	16.9	16.8	16.7	16.5	16.4	16.3	16.1	16.0	15.8	15.3	14.3	12.6
24.0				15.5	15.4	15.3	15.2	15.0	14.9	14.7	14.6	14.5	14.3	14.2	14.1	13.9	13.8	13.0	11.6
26.0				24.79m x 14.8	13.8	13.7	13.6	13.4	13.3	13.2	13.0	12.9	12.7	12.6	12.5	12.3	12.2	11.7	10.5
28.0					27.39m x 12.9	12.3	12.2	12.1	11.9	11.8	11.7	11.5	11.4	11.2	11.1	11.0	10.8	10.5	9.6
30.0						29.99m x 11.2	11.1	10.9	10.8	10.7	10.5	10.4	10.3	10.1	10.0	9.8	9.7	9.6	8.7
32.0							10.1	9.9	9.8	9.7	9.5	9.4	9.3	9.1	9.0	8.8	8.6	8.5	7.8
34.0							32.58m x 8.9	9.0	8.9	8.8	8.7	8.6	8.4	8.3	8.1	7.9	7.7	7.6	7.0
36.0								35.18m x 8.7	8.2	8.0	7.9	7.8	7.6	7.5	7.3	7.1	6.9	6.7	6.3
38.0									37.78m x 7.7	7.4	7.3	7.2	7.0	6.8	6.6	6.4	6.1	5.9	5.6
40.0										6.8	6.7	6.6	6.4	6.1	5.9	5.7	5.3	5.1	4.9
42.0										40.35m x 6.7	6.1	6.0	5.8	5.4	5.2	5.0	4.7	4.5	4.3
44.0											42.98m x 5.9	5.4	5.2	4.8	4.6	4.4	4.1	3.9	3.7
46.0												45.57m x 5.0	4.7	4.3	4.1	3.9	3.6	3.3	3.2
48.0													4.2	3.8	3.6	3.4	3.1	2.9	2.7
50.0													48.17m x 4.1	3.4	3.2	2.9	2.6	2.4	2.2
52.0														50.77m x 3.2	2.7	2.5	2.2	2.0	1.8
54.0															53.37m x 2.5	2.1	1.8	1.6	

IHI CCH 1000-HL


A&K CRANES
Crane & Mechanical


A&K CRANES
03 684 3388
HUMES


TRUCK WASH
03 684 3388
A&K CRANES
Crane & Mechanical
A&K CRANES
Crane & Mechanical
LIEBHERR LTM 1080/1

Liebherr 80 Tonne All Terrain Crane

Our fleet of All –Terrain Cranes are very capable at a wide variety of tasks in the city or some of the most remote parts of the south Island. Combine this with decades of experience you may be surprised what a bit of "outside the box thinking" can do for you!

Versatile Operation performs efficiently on both road and off-road terrains

- **High Capacity** capable of lifting up to 80 tonnes
- **Cutting-Edge Technology** advanced control systems for precise and safe operations
- **Mobility** easy to transport, reducing setup time and costs
- **Enhanced Safety** equipped with comprehensive safety features
- **Eco-Friendly** designed with fuel-efficient engines and lower emissions

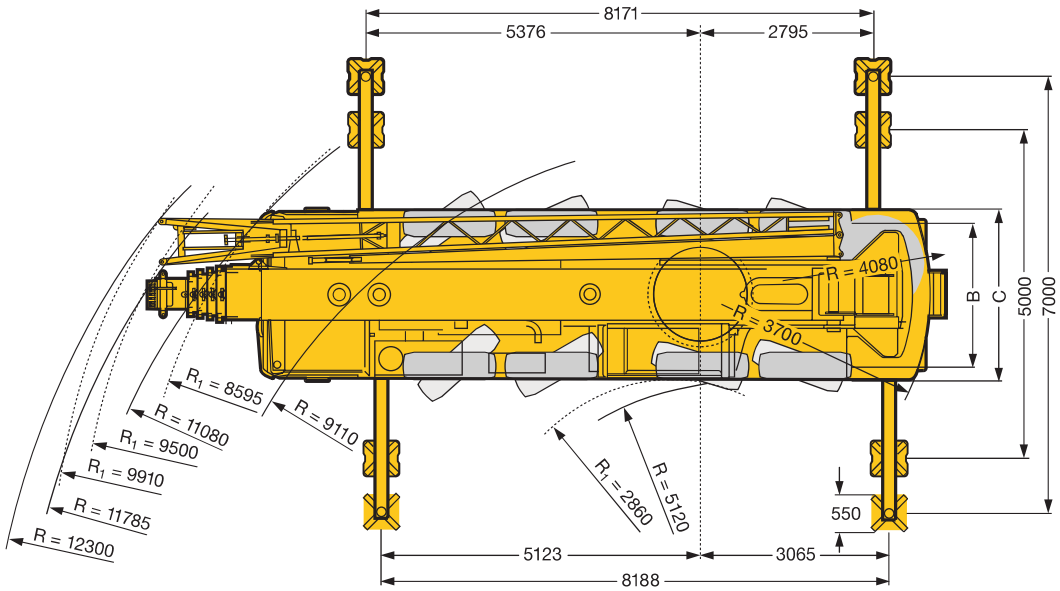

16T COUNTERWEIGHT

m > < t CODE >020< B106 1400

m	10.8	14.2	14.2	17.6	17.6	17.6	21.1	21.1	21.1	24.5	24.5	24.5	27.9	27.9
3.0	62.0	62.0	37.5	57.0	30.5	26.8								
3.5	56.0	56.0	35.5	53.0	28.5	25.0	46.0	23.5	23.5					
4.0	52.0	52.0	33.0	49.5	26.4	23.4	44.0	22.0	22.0					
4.5	47.5	47.5	30.5	46.0	24.4	21.9	42.0	20.7	20.7	35.0	24.0	17.4		
5.0	44.0	44.0	28.8	43.0	22.5	20.5	40.0	19.4	19.4	33.5	22.7	16.4	27.9	19.0
6.0	38.0	37.5	25.7	37.0	20.0	18.3	36.5	16.9	17.0	30.5	20.3	14.6	26.1	17.3
7.0	33.0	32.5	23.1	32.5	17.8	16.6	32.0	15.3	15.3	28.0	18.2	13.1	24.5	15.7
8.0	28.5	28.3	20.7	27.7	16.0	15.1	27.5	13.9	13.9	25.6	16.3	11.6	22.9	14.3
9.0		24.6	19.1	24.1	14.4	13.7	23.8	12.7	12.6	22.9	15.0	10.7	21.0	13.1
10.0		21.6	17.8	21.1	12.9	12.5	20.6	11.6	11.5	19.9	13.8	9.8	19.5	12.1
12.0		16.1	15.4	15.7	11.0	10.9	15.5	9.7	9.5	15.5	11.9	8.4	15.3	10.4
14.0				12.1	9.5	9.6	12.0	8.5	8.3	12.1	10.2	7.2	12.2	9.0
16.0							9.4	7.5	7.3	9.6	8.9	6.2	9.9	7.7
18.0							7.6	6.6	6.4	7.7	7.9	5.6	8.0	6.9
20.0										6.3	7.1	5.0	6.5	6.2
22.0										5.1	6.3	4.5	5.3	5.6
24.0													4.4	5.0
26.0														
28.0														
30.0														
32.0														
34.0														
36.0														
38.0														
40.0														
42.0														
44.0														
* n *	10!	10!	7	10!	6	5	9	5	5	7	5	4	6	4
% 1	0+	0+	0+	46+	0+	0+	92+	0+	0+	92+	0+	0+	92+	0+
% 2	0+	46+	0+	46+	0+	0+	46+	0+	0+	92+	0+	0+	92+	0+
% 3	0+	0+	0+	0+	0+	0+	0+	0+	0+	0+	92+	0+	46+	92+
% 4	0+	0+	0+	0+	46+	0+	0+	92+	46+	0+	46+	92+	0+	92+
% 5	0+	0+	46+	0+	46+	92+	0+	46+	92+	0+	46+	92+	0+	46+
m/s	14.3	14.3	14.3	14.3	14.3	14.3	12.8	12.8	12.8	12.8	12.8	12.8	12.8	12.8

Liebherr 80 Tonne

16T COUNTERWEIGHT

m > < t — CODE >016< — B106 1900

m	27.9	31.3	31.3	31.3	34.8	34.8	34.8	38.2	38.2	41.6	41.6	45.0	48.0	14.2
3.0														15.8
3.5														15.8
4.0														15.8
4.5														15.8
5.0	16.5													15.8
6.0	15.0	22.6	18.8	14.6										15.8
7.0	13.7	19.1	17.3	13.6	18.2	14.8	13.3							15.8
8.0	12.5	15.8	15.9	12.6	15.3	13.9	12.5	15.0	11.9	12.8	11.4			15.8
9.0	11.6	13.3	14.6	11.7	12.9	12.9	11.8	12.9	11.3	12.3	11.0	10.8	8.7	15.8
10.0	10.7	11.3	12.7	10.7	11.1	12.1	11.1	11.1	10.7	10.9	10.6	10.5	8.4	13.8
12.0	9.3	8.5	9.7	9.3	8.4	9.6	9.8	8.5	9.6	8.4	9.2	8.5	7.7	9.6
14.0	8.1	6.5	7.7	8.1	6.4	7.7	8.2	6.7	7.7	6.6	7.3	6.8	6.6	
16.0	7.1	5.0	6.2	7.0	5.0	6.2	6.7	5.3	6.3	5.3	6.0	5.5	5.3	
18.0	5.9	3.8	4.9	5.8	3.9	5.0	5.5	4.2	5.2	4.3	4.9	4.4	4.3	
20.0	4.8	2.9	3.9	4.6	3.0	4.0	4.5	3.3	4.2	3.4	3.9	3.6	3.5	
22.0	4.0	2.2	3.2	3.8	2.3	3.3	3.7	2.6	3.4	2.7	3.2	2.9	2.8	
24.0	3.4	1.7	2.6	3.2	1.7	2.7	3.1	2.0	2.8	2.1	2.6	2.3	2.2	
26.0		1.2	2.1	2.8	1.3	2.2	2.6	1.5	2.4	1.6	2.2	1.8	1.8	
28.0			1.6	2.3	0.9	1.8	2.2	1.2	2.0	1.2	1.8	1.4	1.4	
30.0						1.4	1.9	0.8	1.6	0.9	1.4	1.1	1.1	
32.0						1.1	1.6		1.3		1.2	0.8	0.8	
34.0									1.1		0.9			
" n "	3	5	4	3	4	3	3	3	3	3	2	2	2	3
% 1	0+	92+	0+	0+	92+	0+	0+	92+	0+	92+	46+	92+	100+	0+
% 2	0+	92+	92+	0+	92+	92+	46+	92+	92+	92+	92+	92+	100+	46-
% 3	46+	46+	92+	92+	92+	92+	92+	92+	92+	92+	92+	92+	100+	0+
% 4	92+	46+	46+	92+	46+	92+	92+	46+	92+	92+	92+	92+	100+	0+
% 5	92+	0+	46+	92+	0+	46+	92+	46+	92+	46+	92+	92+	100+	0+
m/s	12.8	11.1	11.1	11.1	11.1	11.1	11.1	11.1	11.1	11.1	11.1	11.1	11.1	14.3

Liebherr 80 Tonne

4.1T COUNTERWEIGHT

m > < t — CODE >016< — B106 1900

m	10.8	14.2	14.2	17.6	17.6	17.6	21.1	21.1	21.1	24.5	24.5	24.5	27.9	27.9
3.0	61.0	61.0	37.5	57.0	30.5	26.8								
3.5	55.0	55.0	35.5	53.0	28.5	25.0	46.0	23.5	23.5					
4.0	51.0	50.0	33.0	49.5	26.4	23.4	44.0	22.0	22.0					
4.5	46.0	46.0	30.5	45.5	24.4	21.9	41.5	20.7	20.7	35.0	24.0	17.4		
5.0	42.0	42.0	28.8	39.0	22.5	20.5	35.5	19.4	19.4	33.0	22.7	16.4	27.9	19.0
6.0	34.5	33.0	25.7	29.6	20.0	18.3	27.3	16.9	17.0	25.8	20.3	14.6	24.6	17.3
7.0	27.7	26.0	23.1	23.4	17.8	16.6	21.5	15.3	15.3	20.4	18.2	13.1	19.6	15.7
8.0	21.4	20.9	20.7	18.7	16.0	15.1	17.3	13.9	13.9	16.6	16.3	11.6	16.1	14.3
9.0		17.0	18.2	15.4	14.4	13.7	14.3	12.7	12.6	13.7	15.0	10.7	13.4	13.1
10.0		13.8	14.9	12.9	12.9	12.5	11.9	11.6	11.5	11.5	13.8	9.8	11.4	12.1
12.0		9.6	10.6	9.1	10.9	10.9	8.6	9.7	9.5	8.4	10.8	8.4	8.4	10.4
14.0				6.6	8.2	8.4	6.4	8.5	8.3	6.2	8.5	7.2	6.3	8.5
16.0							4.5	6.8	7.1	4.5	6.7	6.2	4.6	6.8
18.0							3.3	5.4	5.7	3.3	5.3	5.6	3.5	5.4
20.0										2.5	4.3	4.8	2.6	4.3
22.0										1.7	3.5	4.0	1.9	3.6
24.0													1.3	3.0
26.0														
28.0														
30.0														
32.0														
34.0														
* n *	10!	10!	7	10!	6	5	9	5	5	7	5	4	6	4
% 1	0+	0+	0+	46+	0+	0+	92+	0+	0+	92+	0+	0+	92+	0+
% 2	0+	46+	0+	46+	0+	0+	46+	0+	0+	92+	0+	0+	92+	0+
% 3	0+	0+	0+	0+	0+	0+	0+	0+	0+	0+	92+	0+	46+	92+
% 4	0+	0+	0+	0+	46+	0+	0+	92+	46+	0+	46+	92+	0+	92+
% 5	0+	0+	46+	0+	46+	92+	0+	46+	92+	0+	46+	92+	0+	46+
m/s	14.3	14.3	14.3	14.3	14.3	14.3	12.8	12.8	12.8	12.8	12.8	12.8	12.8	12.8

m > < t — CODE >016< — B106 1900

m	27.9	31.3	31.3	31.3	34.8	34.8	34.8	38.2	38.2	41.6	41.6	45.0	48.0	14.2
3.0														15.8
3.5														15.8
4.0														15.8
4.5														15.8
5.0	16.5													15.8
6.0	15.0	22.6	18.8	14.6										15.8
7.0	13.7	19.1	17.3	13.6	18.2	14.8	13.3							15.8
8.0	12.5	15.8	15.9	12.6	15.3	13.9	12.5	15.0	11.9	12.8	11.4			15.8
9.0	11.6	13.3	14.6	11.7	12.9	12.9	11.8	12.9	11.3	12.3	11.0	10.8	8.7	15.8
10.0	10.7	11.3	12.7	10.7	11.1	12.1	11.1	11.1	10.7	10.9	10.6	10.5	8.4	13.8
12.0	9.3	8.5	9.7	9.3	8.4	9.6	9.8	8.5	9.6	8.4	9.2	8.5	7.7	9.6
14.0	8.1	6.5	7.7	8.1	6.4	7.7	8.2	6.7	7.7	6.6	7.3	6.8	6.6	
16.0	7.1	5.0	6.2	7.0	5.0	6.2	6.7	5.3	6.3	5.3	6.0	5.5	5.3	
18.0	5.9	3.8	4.9	5.8	3.9	5.0	5.5	4.2	5.2	4.3	4.9	4.4	4.3	
20.0	4.8	2.9	3.9	4.6	3.0	4.0	4.5	3.3	4.2	3.4	3.9	3.6	3.5	
22.0	4.0	2.2	3.2	3.8	2.3	3.3	3.7	2.6	3.4	2.7	3.2	2.9	2.8	
24.0	3.4	1.7	2.6	3.2	1.7	2.7	3.1	2.0	2.8	2.1	2.6	2.3	2.2	
26.0		1.2	2.1	2.8	1.3	2.2	2.6	1.5	2.4	1.6	2.2	1.8	1.8	
28.0			1.6	2.3	0.9	1.8	2.2	1.2	2.0	1.2	1.8	1.4	1.4	
30.0						1.4	1.9	0.8	1.6	0.9	1.4	1.1	1.1	
32.0						1.1	1.6		1.3		1.2	0.8	0.8	
34.0									1.1		0.9			
* n *	3	5	4	3	4	3	3	3	3	3	2	2	2	3
% 1	0+	92+	0+	0+	92+	0+	0+	92+	0+	92+	46+	92+	100+	0+
% 2	0+	92+	92+	0+	92+	92+	46+	92+	92+	92+	92+	92+	100+	46-
% 3	46+	46+	92+	92+	92+	92+	92+	92+	92+	92+	92+	92+	100+	0+
% 4	92+	46+	46+	92+	46+	92+	92+	46+	92+	92+	92+	92+	100+	0+
% 5	92+	0+	46+	92+	0+	46+	92+	46+	92+	46+	92+	92+	100+	0+
m/s	12.8	11.1	11.1	11.1	11.1	11.1	11.1	11.1	11.1	11.1	11.1	11.1	11.1	14.3

Liebherr 80 Tonne

A&K CRANES
Crane & Mechanical

50 Tonne All Terrain Cranes

- **Versatility** suitable for a wide range of terrains, from paved roads to rough construction sites
- **Mobility** easy to transport between job sites without the need for special permits
- **High Lifting Capacity** capable of lifting heavy loads up to 50 tonnes, ideal for medium-sized construction projects
- **Compact Design** can operate in confined spaces where larger cranes might not fit
- **Advanced Technology** equipped with modern control systems for precise operations and enhanced safety features
- **Quick Setup** rapid deployment and setup time, increasing efficiency and productivity on job sites
- **All-Wheel Steering** and all-wheel drive 6x6x6 enhanced maneuverability in tight spaces and on challenging terrains

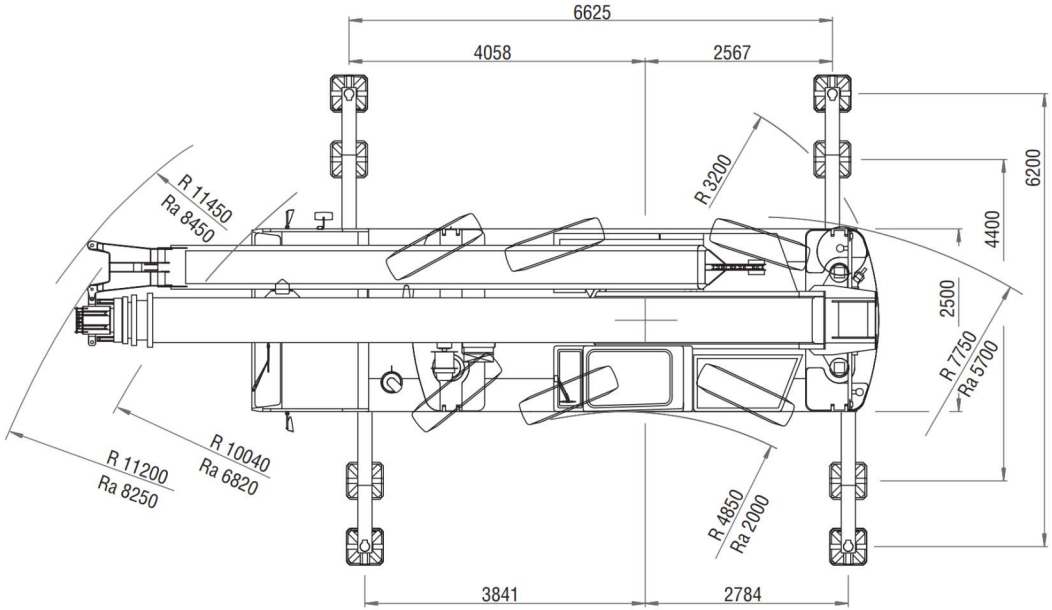

50 Tonne All Terrain

GROVE KRUPP 3050 10.5T COUNTERWEIGHT

Supporting Span 6,625 x 6200m

Telescoping section	Main boom - fixed lengths in m									
	9.8	9.8	13.4	13.4	16.9	16.9	20.4	20.4	24.0	24.0
I	0.0	0.0	0.5	0.0	1.0	0.0	1.0	0.0	1.0	0.0
II	0.0	0.0	0.0	0.17	0.0	0.33	0.17	0.5	0.33	0.67
III	0.0	0.0	0.0	0.17	0.0	0.33	0.17	0.5	0.33	0.67
IV	0.0	0.0	0.0	0.17	0.0	0.33	0.17	0.5	0.33	0.67
Slewing range	0° to rear	360°								
Radius in m	Lifting capacity in t									
3.0	50.0	45.0	30.5	16.0	30.5	16.0	16.0	16.0	16.0	15.0
4.0	36.5	36.5	27.5	16.0	30.0	16.0	16.0	16.0	16.0	14.3
5.0	31.0	31.0	23.5	16.0	26.0	16.0	16.0	16.0	16.0	12.9
6.0	25.5	25.5	20.5	16.0	23.5	16.0	16.0	15.8	16.0	11.6
7.0	21.5	21.5	18.6	16.0	20.5	16.0	16.0	14.4	16.0	10.7
8.0			16.6	16.0	16.4	16.0	16.0	13.1	15.2	9.8
9.0			13.6	14.8	13.3	15.2	13.8	12.2	13.9	9.0
10.0			11.3	12.4	11.0	12.8	11.5	11.3	11.9	8.3
11.0					9.2	10.9	9.7	10.6	10.1	7.8
12.0					7.8	9.5	8.3	9.7	8.7	7.3
13.0					6.7	8.3	7.2	8.5	7.5	6.8
14.0					5.7	7.4	6.2	7.6	6.6	6.4
15.0							5.4	6.8	5.8	6.1
16.0							4.7	6.1	5.1	5.8
18.0									4.0	5.1
20.0									3.1	4.2
SLI - Code	311.0	310.0								
Max. permitted wind speed in m/sec.	14	14	14	14	14	14	14	14	14	14

Telescoping section	Main boom - fixed lengths in m					
	27.5	27.5	31.0	31.0	34.6	38.1
I	1.0	0.0	1.0	0.0	1.0	1.0
II	0.5	0.83	0.67	1.0	0.83	1.0
III	0.5	0.83	0.67	1.0	0.83	1.0
IV	0.5	0.83	0.67	1.0	0.83	1.0
Slewing range	360°					
Radius in m	Lifting capacity in t					
3.0	15.0	11.5				
4.0	15.0	11.5	11.0	10.0	8.5	
5.0	15.0	11.4	11.0	9.9	8.5	7.2
6.0	15.0	11.0	11.0	9.7	8.5	7.2
7.0	15.0	10.6	11.0	9.5	8.5	7.2
8.0	13.8	10.1	10.8	9.4	8.5	7.2
9.0	12.5	9.7	10.2	9.2	8.4	7.2
10.0	11.6	9.1	9.6	8.6	8.4	7.2
11.0	10.3	8.6	9.1	8.0	8.4	7.2
12.0	8.9	8.1	8.5	7.3	8.3	7.1
13.0	7.8	7.6	8.0	6.9	7.8	7.0
14.0	6.8	7.1	7.0	6.5	7.2	6.9
15.0	6.0	6.7	6.2	6.1	6.4	6.5
16.0	5.3	6.3	5.5	5.8	5.7	5.8
18.0	4.2	5.2	4.4	5.2	4.6	4.7
20.0	3.3	4.3	3.5	4.3	3.7	3.8
22.0	2.6	3.6	2.8	3.6	3.0	3.1
24.0	2.1	3.0	2.2	3.1	2.4	2.5
26.0			1.7	2.6	1.9	2.0
28.0			1.4	2.2	1.5	1.6
30.0					1.2	1.3
32.0						1.0
34.0						0.8
SLI - Code	310.0					
Max. permitted wind speed in m/sec.	10	10	10	10	10	10

GROVE KRUPP 3050 7T COUNTERWEIGHT

Supporting Span 6,625 x 6200m

Telescoping section	Main boom - fixed lengths in m									
	9.8	9.8	13.4	13.4	16.9	16.9	20.4	20.4	24.0	24.0
I	0.0	0.0	0.5	0.0	1.0	0.0	1.0	0.0	1.0	0.0
II	0.0	0.0	0.0	0.17	0.0	0.33	0.17	0.5	0.33	0.67
III	0.0	0.0	0.0	0.17	0.0	0.33	0.17	0.5	0.33	0.67
IV	0.0	0.0	0.0	0.17	0.0	0.33	0.17	0.5	0.33	0.67
Slewing range	0° to rear	360°								
Radius in m	Lifting capacity in t									
3.0	50.0	45.0	30.5	16.0	30.5	16.0	16.0	16.0	16.0	15.0
4.0	36.5	36.5	27.5	16.0	30.0	16.0	16.0	16.0	16.0	14.3
5.0	30.0	30.0	23.5	16.0	26.0	16.0	16.0	16.0	16.0	12.9
6.0	24.5	24.5	20.5	16.0	23.5	16.0	16.0	15.8	16.0	11.6
7.0	18.9	18.9	18.2	16.0	17.8	16.0	16.0	14.4	16.0	10.7
8.0			14.2	15.5	13.8	15.9	14.4	13.1	14.8	9.8
9.0			11.4	12.6	11.1	13.0	11.6	12.2	12.0	9.0
10.0			9.4	10.5	9.1	10.9	9.6	11.1	10.0	8.3
11.0					7.5	9.3	8.1	9.5	8.4	7.8
12.0					6.3	8.0	6.8	8.2	7.2	7.3
13.0					5.2	7.0	5.8	7.2	6.1	6.8
14.0					4.4	6.1	4.9	6.3	5.3	6.4
15.0							4.2	5.6	4.5	5.7
16.0							3.6	5.0	3.9	5.1
18.0									2.9	4.1
20.0									2.2	3.3
SLI - Code	211.0	210.0								
Max. permitted wind speed in m/sec.	14	14	14	14	14	14	14	14	14	14

Telescoping section	Main boom - fixed lengths in m					
	27.5	27.5	31.0	31.0	34.6	38.1
I	1.0	0.0	1.0	0.0	1.0	1.0
II	0.5	0.83	0.67	1.0	0.83	1.0
III	0.5	0.83	0.67	1.0	0.83	1.0
IV	0.5	0.83	0.67	1.0	0.83	1.0
Slewing range	360°					
Radius in m	Lifting capacity in t					
3.0	15.0	11.5				
4.0	15.0	11.5	11.0	10.0	8.5	
5.0	15.0	11.4	11.0	9.9	8.5	7.2
6.0	15.0	11.0	11.0	9.7	8.5	7.2
7.0	15.0	10.6	11.0	9.5	8.5	7.2
8.0	13.8	10.1	10.8	9.4	8.5	7.2
9.0	12.2	9.7	10.2	9.2	8.4	7.2
10.0	10.2	9.1	9.6	8.6	8.4	7.2
11.0	8.7	8.6	8.9	8.0	8.4	7.2
12.0	7.4	8.1	7.6	7.3	7.8	7.1
13.0	6.4	7.4	6.6	6.9	6.8	6.9
14.0	5.5	6.6	5.7	6.5	5.9	6.1
15.0	4.8	5.8	5.0	5.9	5.2	5.3
16.0	4.2	5.2	4.3	5.3	4.6	4.7
18.0	3.2	4.2	3.3	4.2	3.5	3.7
20.0	2.4	3.4	2.6	3.4	2.8	2.9
22.0	1.8	2.7	2.0	2.8	2.2	2.3
24.0	1.3	2.2	1.5	2.3	1.7	1.8
26.0			1.1	1.9	1.3	1.4
28.0			0.7	1.5	0.9	1.0
30.0					0.6	0.7
SLI - Code	210.0					
Max. permitted wind speed in m/sec.	10	10	10	10	10	10

50 Tonne All Terrain

A-K CRANES
Crane & Mechanical

Kato NK250

- **Compact and Mobile** the NK250 is relatively compact, allowing for easy maneuverability in tight spaces and on urban job sites
- **Strong Lifting Capacity** with a 25-tonne capacity, it is suitable for a variety of small-medium sized lifting tasks
- **Versatile Application** suitable for both construction and industrial lifting tasks, offering flexibility across different types of projects from man cages to portable prefabs and on-site containers etc.
- **Efficient Setup** quick setup and takedown times increase productivity on job sites

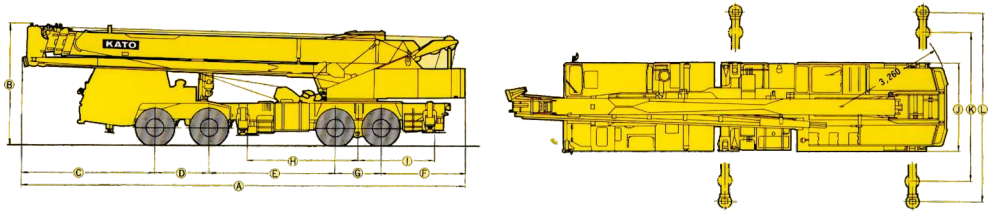

CARRIER	A	B	C	D	E	F	G	H	I	J	K	L
NK-250-v	12,450	3,400	3,760	1,520	3,530	2,340	1,300	3,100	2,150	2,490	4,100	6,100

Measurement: mm

CRANE CAPACITY

- Hydraulic boom length = 10.5m - 33m. Plus fly jib gives a total of 47.5m
- Working radius from 2.5m - 35.5m
- Maximum point tip height approximately 49m
- Set up space = 5.5m x 5.25m and Tare weight 28100 kg

Examples of Lifting Capacity with Outriggers fully extended:

- 21 tonnes @ 4.5m operating radius on boom at 10.5m
- 9.1 tonnes @ 9.0m operating radius on boom at 21.7m
- 2.0 tonnes @ 20.0m operating radius on boom at 33.0m
- 1.0 tonnes @ 25.0m operating radius on boom at 41.7m

Kato NK250

RATED LIFTING LOADS

- Outriggers Fully Extended With Front Jack (360° Full Range)
- Outriggers Fully Extended Without Front Jack
  (Over Side & Over Rear)

Work Radius (m)	10.5m Boom	14.2m Boom	18.0m Boom	21.7m Boom	25.5m Boom	29.2m Boom	33.0m Boom
2.5	25.00	20.00	16.00				
3.0	25.00	20.00	16.00				
3.5	25.00	20.00	16.00	12.00			
4.0	22.90	20.00	16.00	12.00	11.50		
4.5	21.00	20.00	16.00	12.00	11.50		
5.0	19.40	18.40	16.00	12.00	11.50	9.00	
6.0	16.20	15.30	13.73	12.00	11.50	9.00	
7.0	13.70	12.65	11.95	11.00	10.00	9.00	7.00
8.0	11.43	10.56	10.39	10.20	8.90	8.20	7.00
8.8	9.40	9.18	9.07	9.40	8.25	7.60	6.40
9.0		8.88	8.67	9.10	8.05	7.45	6.25
10.0		7.20	7.04	7.58	7.30	6.75	5.70
12.0		4.87	4.76	5.29	5.61	5.65	4.80
12.5		4.41	4.35	4.83	5.16	5.32	4.55
13.0			3.99	4.43	4.80	4.92	4.45
14.0			3.33	3.82	4.09	4.31	4.10
16.0			2.42	2.80	3.02	3.29	3.35
16.3			2.32	2.70	2.92	3.19	3.25
18.0				2.09	2.31	2.53	2.64
20.0				1.48	1.70	1.92	2.03
22.0					1.24	1.41	1.52
23.8					0.94	1.06	1.22
26.0						0.75	0.86
27.5						0.50	0.71
29.0							0.46
31.3							0.25
Standard Hook	for 25 ton						
Hook Weight	280 kgs						
Parts of Line	8			4			
Critical Boom Angle	-	-	-	-	-	-	-

Unit: Ton

WORKING RANGE

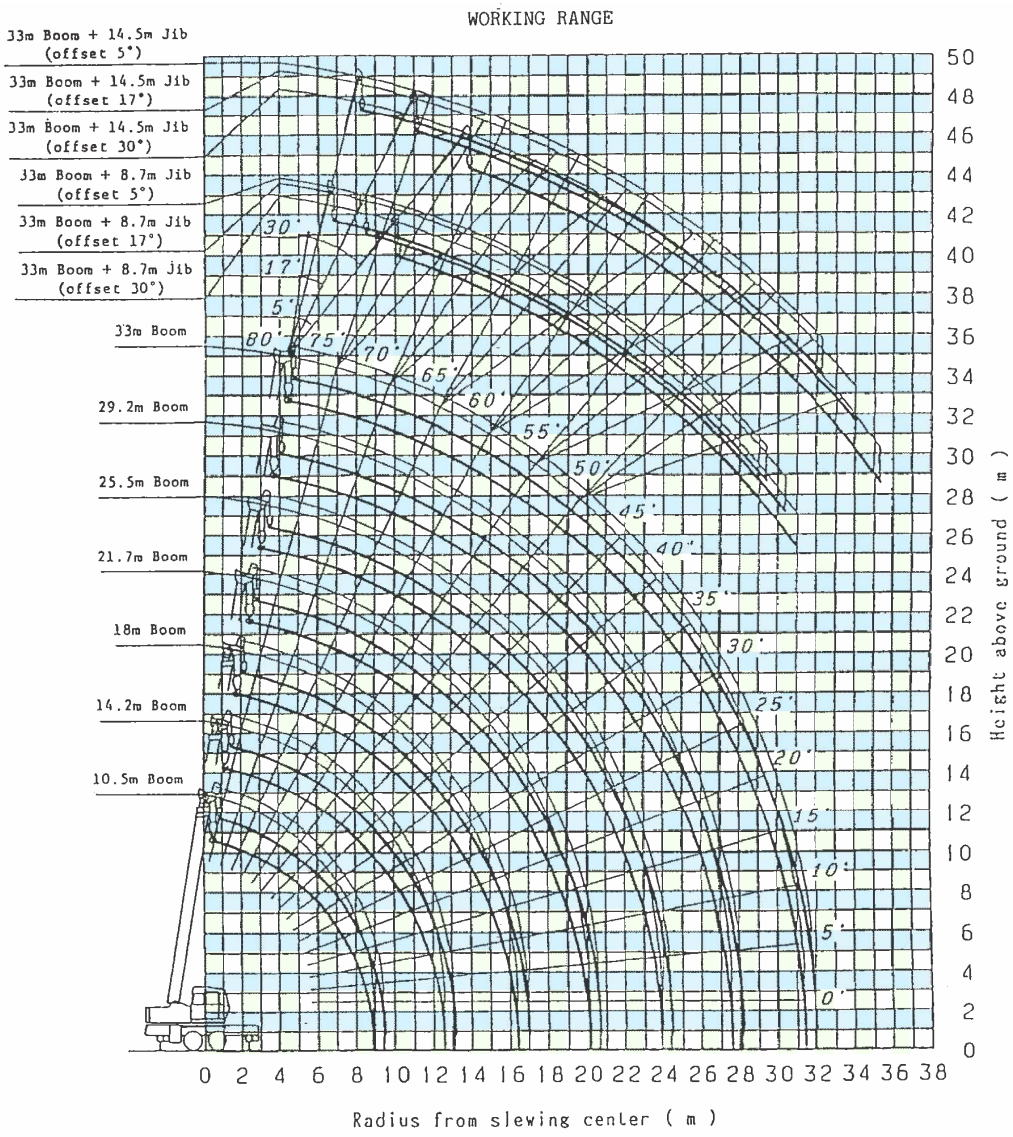

NOTE: Deflection of boom and jib excluded.

Kato NK250

Palfinger Crane Truck

Palfinger Crane

Palfingers most popular model the PK33002, sets the bench mark for rear mounted cranes on an 8 x 4 chassis, This one has the long boom option (G Boom) and wide leg options giving it the best in class ability for long reach and lift capability with a boom length of 21.5m

Renowned for its high performance, versatility, and durability. Offering advanced features designed for efficiency and minimal maintenance, making it a good cost effective choice for your lifting requirements.

This machine is perfect for lift and shift type work,

- **Site Containers**
- **Temporary Offices**
- **Structural Steel**
- **Playhouses**
- **Sleep-outs**
- **Heavy Workshop Equipment**
- **21.3m Hydraulic Outreach**
- **Stabiliser Spread 7.5m**
- **Truck Load 9.5 tonne Trailer Load 10.5 tonne**

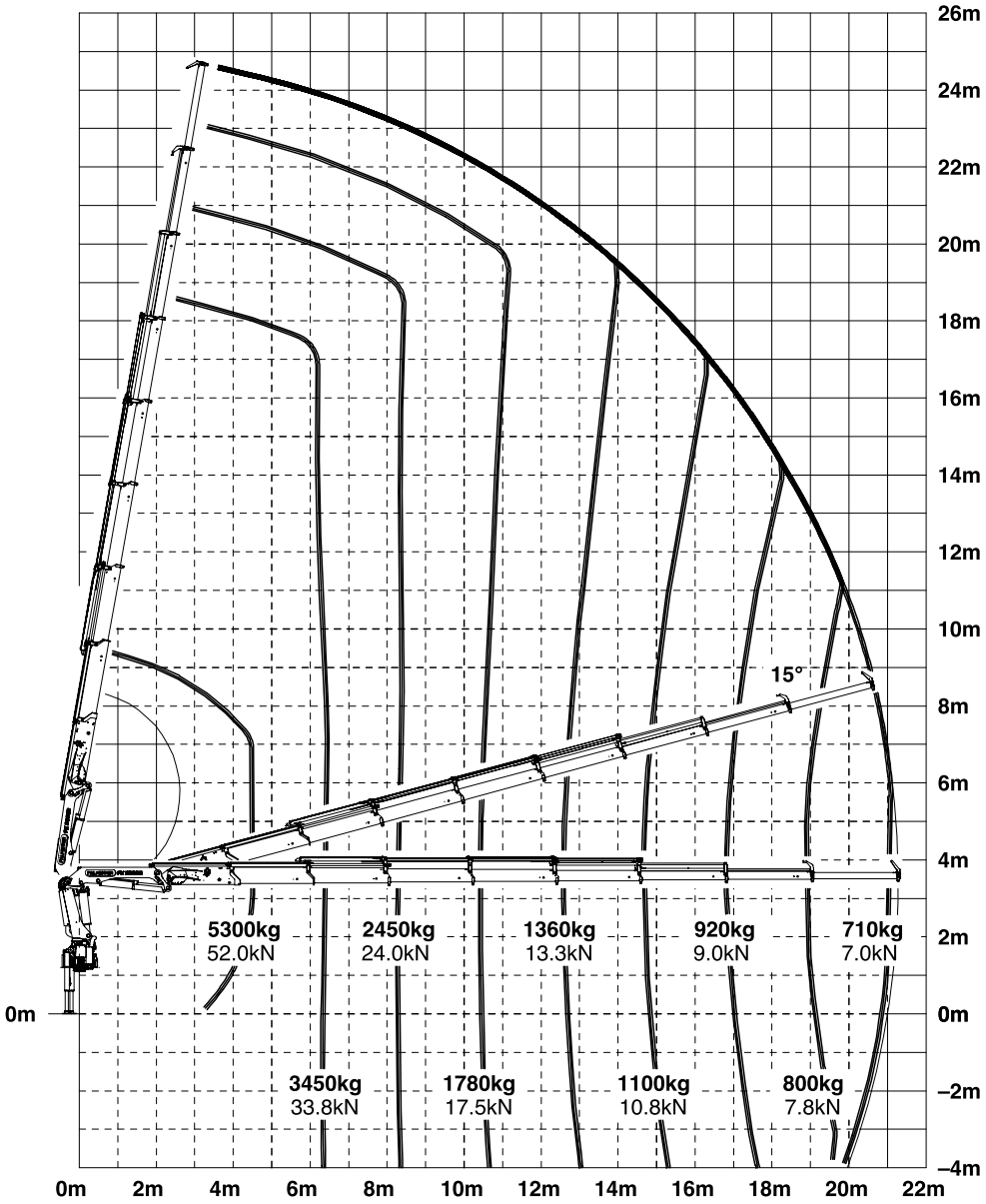

Palfinger Crane

A&K CRANES
Crane & Mechanical

Heavy Transport

A&K Cranes stands out as a premier provider of heavy transport services, known for its reliability, expertise, and commitment to safety. With a proven track record in the industry, A&K Cranes offers a comprehensive range of services tailored to meet the diverse needs of clients, whether it's transporting oversized equipment, heavy machinery, or complex loads.

Their experienced team is well-versed in handling the logistical challenges associated with heavy transport, ensuring that each project is executed with precision and efficiency. This expertise, combined with a fleet of state-of-the-art equipment, allows them to tackle even the most demanding tasks with confidence.

In addition to their technical capabilities, A&K Cranes places a strong emphasis on customer satisfaction. They work closely with clients to develop customised solutions that align with specific project requirements, timelines, and budgets. Their commitment to safety is unparalleled, with stringent protocols in place to protect both personnel and cargo during every stage of transportation. Choosing A&K Cranes means partnering with a trusted leader in the heavy transport industry, dedicated to delivering exceptional results and ensuring the seamless execution of every project.

Heavy Transport

- **Mack & 3x4 transporter with winch for loads to 32 tonne**
- **Deck Mounted Winch**

  Ideal for winching on and off, everything from tiny homes to broken down trucks or heavy machinery.

Partnerships with Heavy Transporter 3x8, 4x8 and Dollys, Jinkers and for the really heavy we have multi axle platform trailers through our partners for loads of several hundred tonne!

Additional Services

Additional Services

- Concrete Dead-man Block Hire
- Container Hire and Storage
- Container Swinglift Hire
- Gantry Crane Testing Equipment
- Class 1 and 2 Piloting
- Lift and Logistics Planning
- Tray-dec and Nelson Stud Supply and Install
- Engineering and Design
- Labour Hire
- Container, Porta Com and Building Removals
- General Transport Trucks, Trailers and Semi's

Additional Services

YouTube

facebook

www

A&K CRANES
Crane & Mechanical

CONTACT: Adam Trezise

m.027 480 1657 e.adam@craneandmechanical.com

aandkcranes.com A-K-Cranes

p.03 354 33 88 CHRISTCHURCH p.03 684 33 88 TIMARU